QUESTION 2

TRANSITION DEVELOPMENT

The figure shows the Front View, Top View and Left View of an AIR CONDITIONING VENT in First Angle orthographic projection.

Draw the following:

2.1 Copy the given FRONT view and TOP view only, positioning them appropriately on the given centre lines.
2.2 Draw the development of the SQUARE DUCTING (PART A).
2.3 Using triangulation, develop the transition piece (PART B).
2.4 Show all construction.

ASSESSMENT CRITERIA

You will be assessed on your ability to do the following:

• redraw the given front and top views only	4
• develop the square duct	7
• find the necessary true lengths	4
• develop the transition piece	20

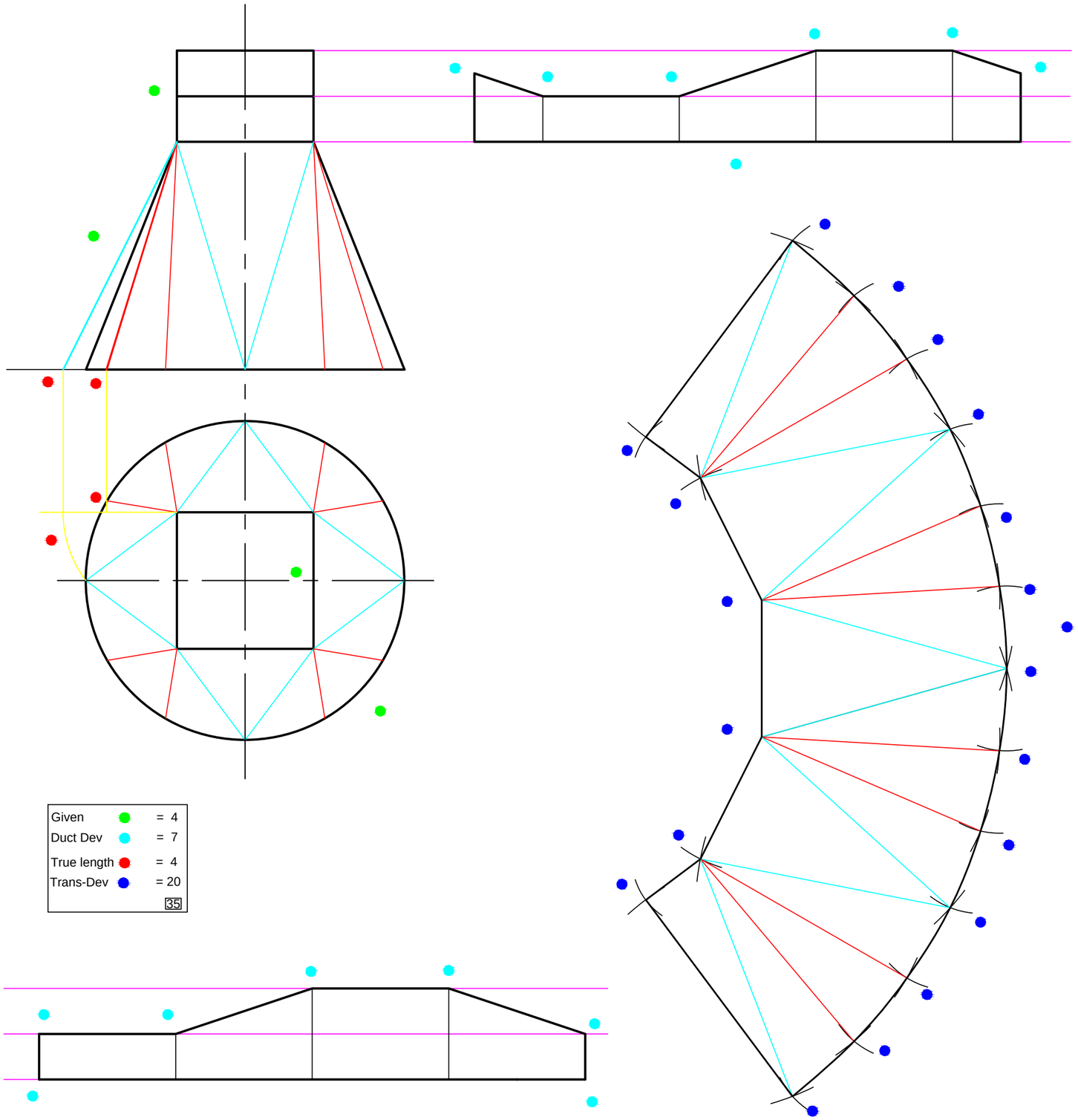

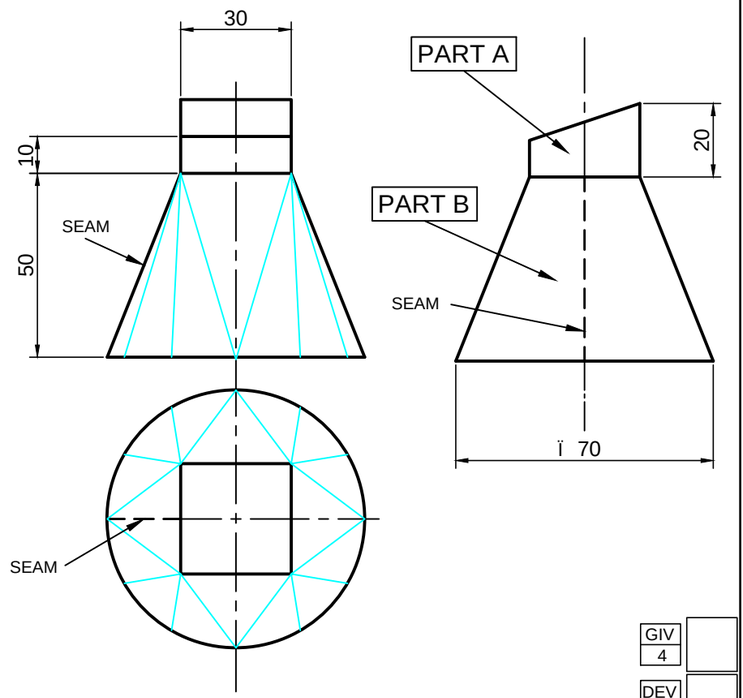

GIV 4	
DEV 7	
T / L 4	
DEV 20	
35 MARKS	

ANSWER SHEET 2

EXAMINATION NUMBER